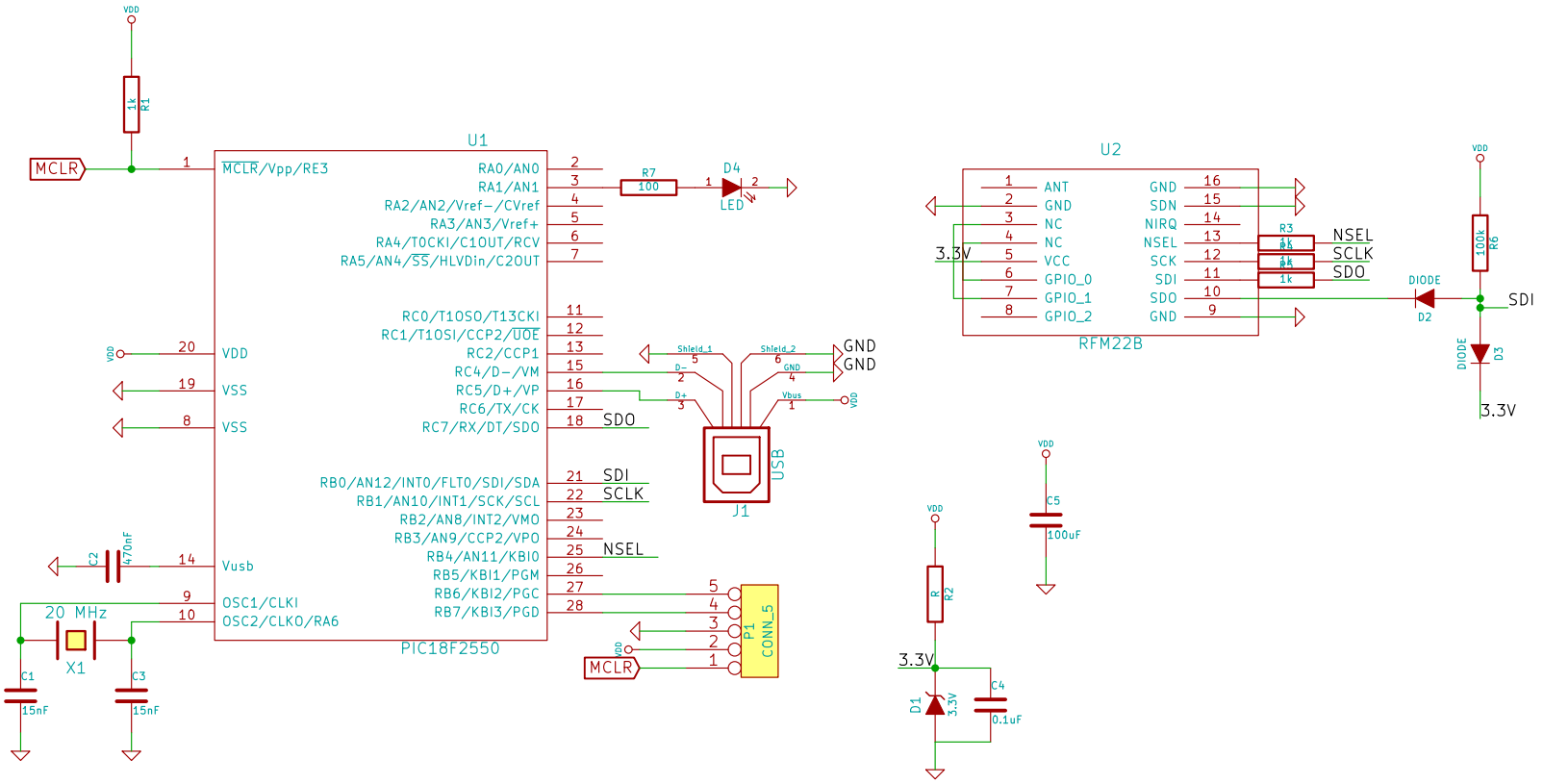

File: switches.sch		
Sheet: /		
Title:		
Size: A4	Date: 4 aug 2015	Rev:
KiCad E.D.A.		Id: 1/1